http://karthik3685.wordpress.com

ANNA UNIVERSITY :: CHENNAI – 600 025 MODEL QUESTION PAPER

VI - SEMESTER

B.E. ELECTRICAL AND ELECTRONICS ENGINEERING

EE339 - POWER SYSTEM ANALYSIS

Time: 3hrs **Max Marks: 100**

Answer all Questions

PART – A (10 x 2 = 20 Marks)

1. What is the need for system analysis in planning and operation of power system?

2. How are the base values chosen in per unit representation of a power system?

3. Draw the Π equivalent circuit of a transformer with off-nominal tap ratio t and admittance y.

4. Define bus incidence matrix.

5. Mention two objectives of short circuit analysis.

6. Draw the zero sequence network of a star connected generator with zero sequence impedance Z_{go} when the neutral is grounded through an impedance Z_n.

7. What are the three classes of buses of a power system used in power flow analysis? What are the quantities to be specified and to be computed for each class during power flow solution?

8. Compare Gauss-Seidel method and Newton – Raphson method with respect to number of iterations taken for convergence and memory requirement.

9. Define critical clearing time.

10. Write the power-angle equation of a synchronous machine connected to an infinite bus and also the expression for maximum power transferable to the bus.

PART B (5 x 16 = 80 Marks)

11. Obtain the per unit impedance (reactance) diagram of the power system shown in Fig.Q.11

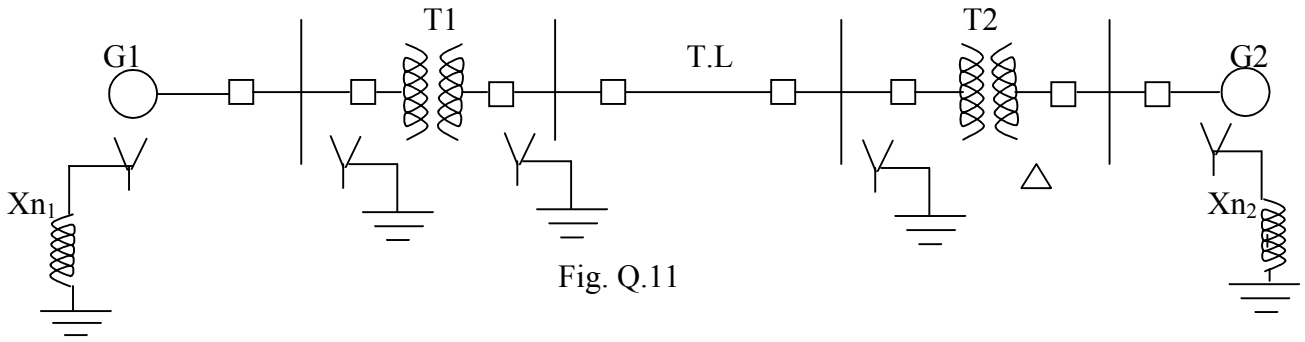

Fig. Q.11

Generator No.1: 20 MVA, 10.5 KV, X'' = 1.4 ohms, X_{n1}= 0.5 ohm
Generator No.2: 10 MVA, 6.6 KV, X"= 1.2 ohms, X_{n2} = 0.5 ohm
Transformer T1 (3 phase): 10 MVA, 33/11 kV, X = 15.2 ohms per phase on high tension side.
Transformer T2 (3 phase) : 10 MVA, 33/6.2 kV, X= 16 ohms per phase on high tension side.
Transmission line: 22.5 ohms / phase.
Choose a common base of 20 MVA

12.a) Determine Z bus using bus impedance matrix building algorithm by adding the lines as per increasing element number. The reactance diagram of the system is shown in Fig. Q.12(a).

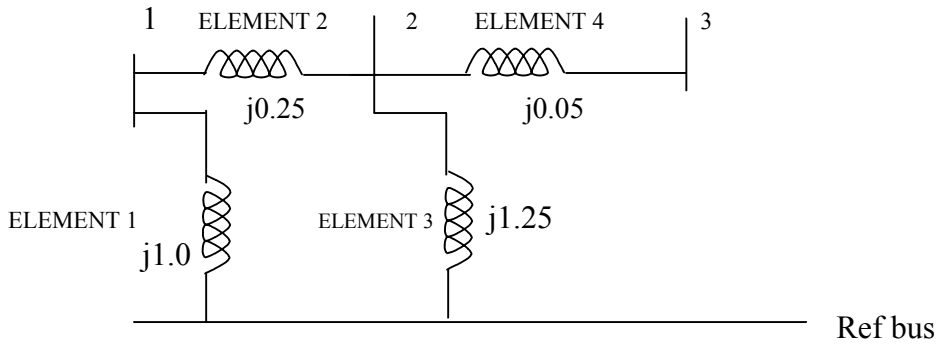

Fig Q.12 (a)

(OR)

12.b) Explain the modelling of Generator, Load and Transmission line for short circuit, power flow and stability studies.

13.a) Derive the formula for fault current, fault-bus voltages and current through the lines for a 3 phase symmetrical fault at a bus in a power system using Z bus. State the assumptions made in the derivation.

(OR)

13.b) A single line to ground fault occurs on bus 4 of the system shown in Figure. Q.13(b)
(i) Draw the sequence networks.
(ii) Compute the fault current

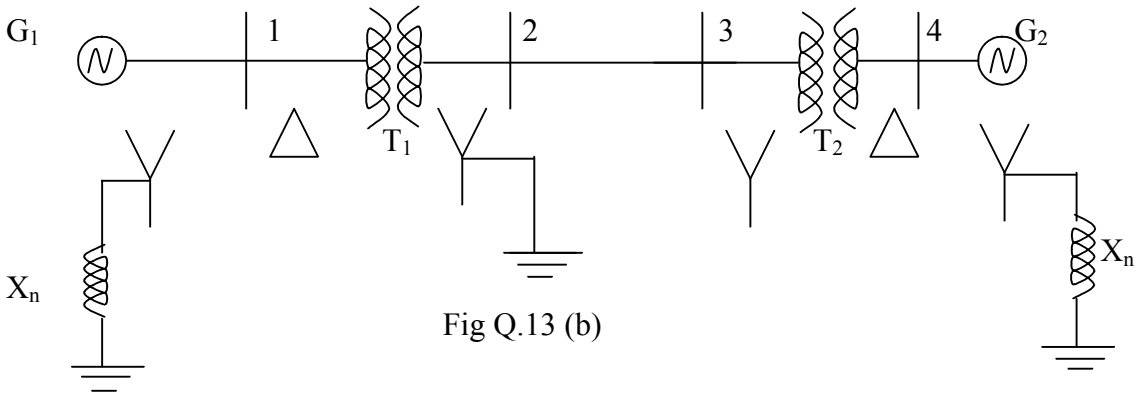

Fig Q.13 (b)

Generator 1 & 2 : 100 MVA, 20kV with $X_1 = X_2 = 20\%$, $X_0 = 4\%$, Xn = 5%
Transformer 1 & 2 : 100 MVA, 20kV/345kV. $X_{leakage} = 8\%$ on 100 MVA.
Transmission line: $X_1 = X_2 = 15\%$ and $X_0 = 50\%$ on a base of 100 MVA, 20kV

14.a) Explain clearly the algorithmic steps for solving load flow equations using Newton – Raphson method (polar form) when the system contains all types of buses. Assume that the generators at the P-V buses have enormous Q limits and hence Q limits need not be checked.

(OR)

14.b) The system data for a load flow problem are given in Table 1 and Table 2.
(i) Compute Y bus
(ii) Determine bus voltages at the end of 1st iteration by Gauss-Seidel method. Take acceleration factor as 1.6.

Bus Code of Lines	Admittance (p.u)
1-2	2-j8
1-3	1-j4
2-3	0.6-j2.6

TABLE – 1 Line Data

Bud Code	P Demand in p.u	Q Demand in p.u	V, p.u	Remarks
1	-	-	1.06∟0	Slack
2	0.5	0.2	-	PQ
3	0.4	0.3	-	PQ

TABLE – 2 Bus Data

15.a)i) Write the swing equation describing the rotor dynamics of a synchronous machine connected to infinite bus through a double circuit transmission line.

ii) Explain the step-wise procedure of determining the swing curve of the above system using Modified Euler's method.

(OR)

15.b) In the system shown in Fig, Q. 15(b) a 3 phase fault occurs at point P closer to bus 2.

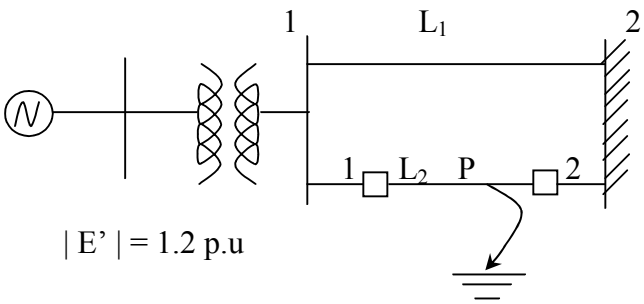

Fig. Q.15 (b)

Find the critical clearing angle for clearing the fault with simultaneous opening of the breakers 1 & 2. The reactance values of the various components are $X_g = 0.15$ p.u X_{tr}=0.1 p.u, $X_{L1} = 0.5$ p.u, $X_{L2} = 0.4$ p.u. The generator is delivering 1.0 p.u power at the instant preceding the fault.